POTATO2 27MHz AM Transceiver Kit

Assemble Manual V3.0

Overview

"Potato2" is designed by DINUCO. It is controlled by STC8H8K64 single chip microcomputer, A PLL device is used as local oscillator, and a high-speed driver chip is used as MOS FET driver, which realizes the AM transmitting circuit with 5W Class E power output. At the same time, the receiving circuit is superheterodyne scheme, which realizes low noise and high sensitivity. The kit was developed by us, combined with the actual use of the domestic situation, corrected several key problems, after many debugging to form the current version.

The hardware described in this article is V3.0 and the main PCB labelled “POTATO2_3”.

Specifications

Power supply: 12V-13.8V (linear regulated power supply is recommended)
Antenna: 50 ohms, unbalanced
Typical receive current: 150mA
Typical Transmit current: 900mA
Transmit power: 5W
Operating frequency: 26.965-27.405MHz
Working mode: AM

Circuit Description

Refer to the attached figure at the end of this document.

The core of the receiving part is a TA2003. Inside it, there is a balanced mixer. The signal from the antenna passes through a BPF filter, then enters the mixer of TA2003, converting the AM signal to a 10.7 MHz intermediate frequency signal. Finally, it is sent to the second TA2003 and mixed with the intermediate frequency signal again, outputting a 455 KHz signal for demodulation.

Thus, the entire receiving process is completed.

The RF section uses a high-speed driver for buffering and amplification, drives the MOSFET connected in parallel for E-class amplification. Finally, through an output impedance matching network, the high-frequency signal is matched and then filtered by an LPF before being connected to the antenna. The audio signal is amplified by LM386 and used to modulate the power supply of the E-class amplifier.

When making an automatic call, the "To Alice" music is generated by the UM66T and is automatically transmitted after pressing the CALL button.

Component selection

L3, L4, and L5 are air core inductors. L3 uses 0.75 mm enamels to wind 6 times on the magnetic ring, L4 and L5 use 0.75 mm enamels to wind 4.5 times and 3.5 times on the 5 mm diameter drill (or pen), respectively, paying attention to the direction of the circle.

All capacitors less than 1000pF are high-frequency tiles, capacitors greater than 1uF are aluminum electrolytic capacitors, and all resistors are 1/4W 5% fixed resistors

Soldering Reminder

1 First weld the two 5-PIN connection pins on the OLED back board,

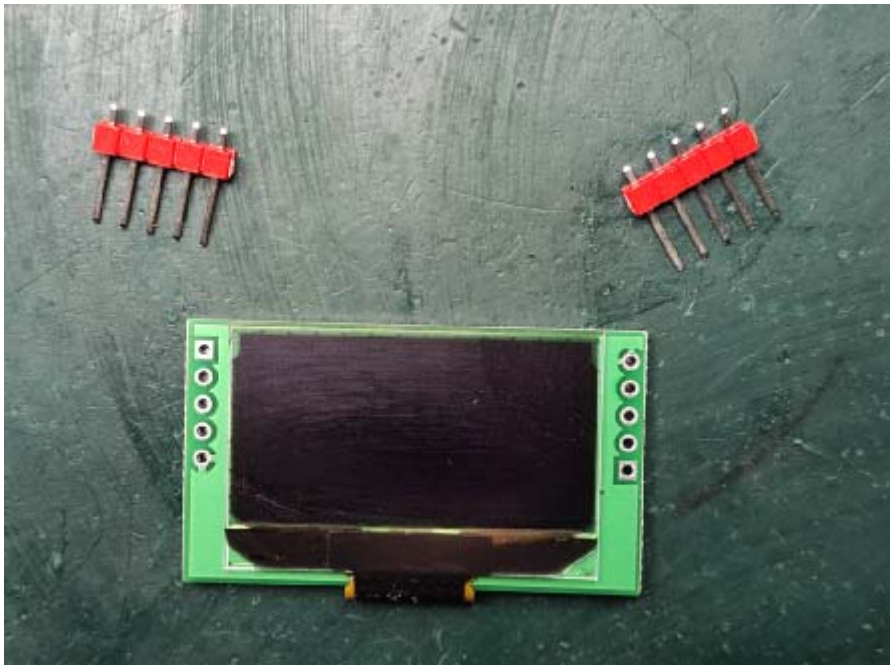

2 Welding the keyboard board

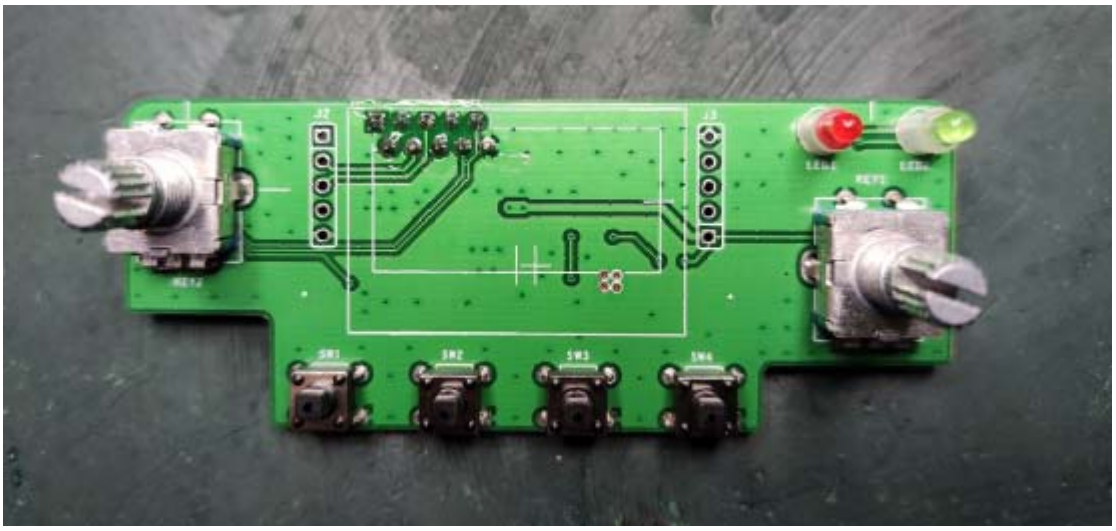

2 Do not weld the OLED display board with the keyboard board! After assembling everything together, tighten the encoder nuts on both sides.

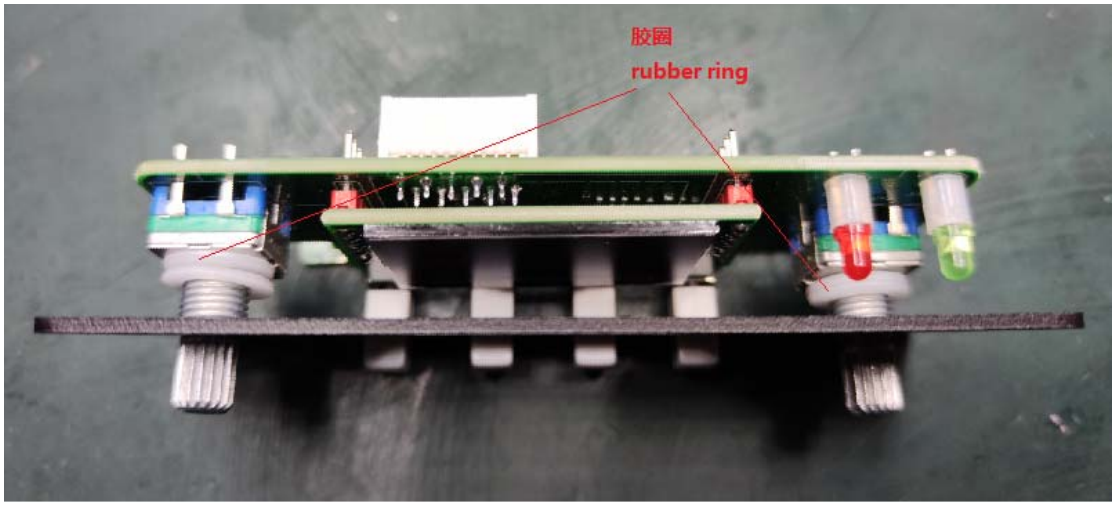

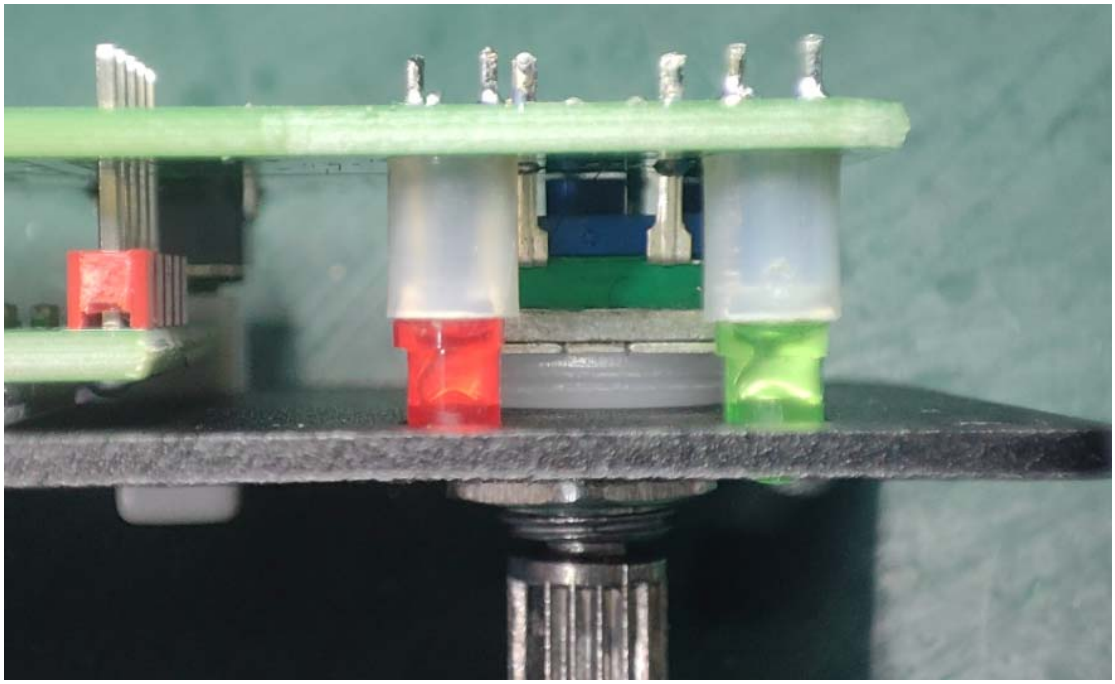

After the OLED backp board is closely fitted to the front panel, solder the needles on the OLED display board

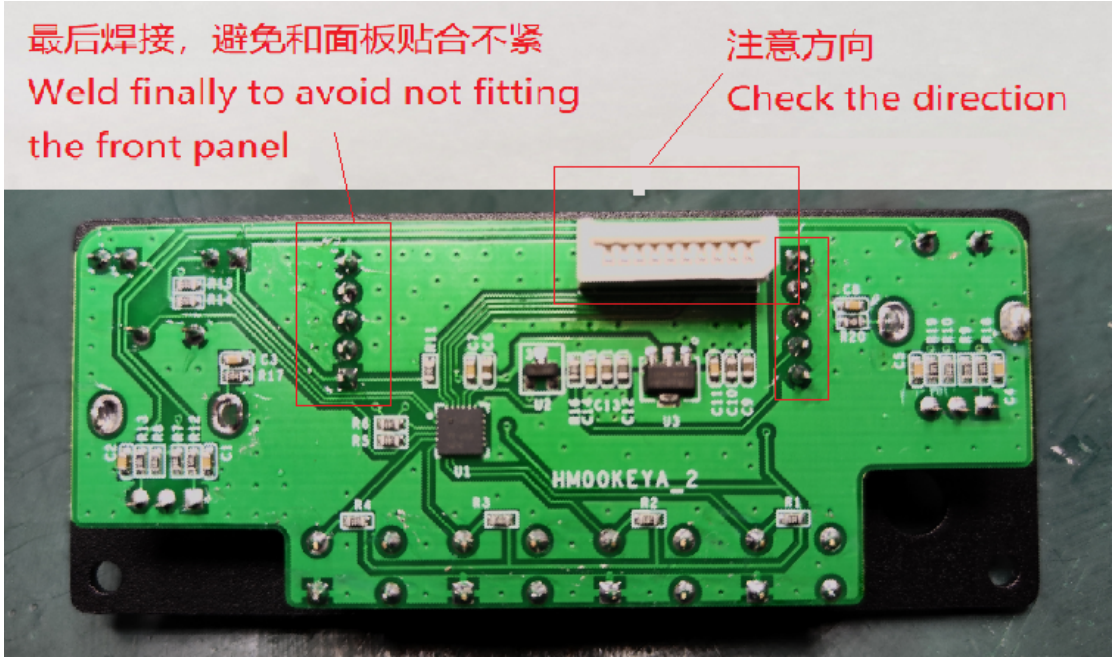

Rear panel assembly

Speaker assembly

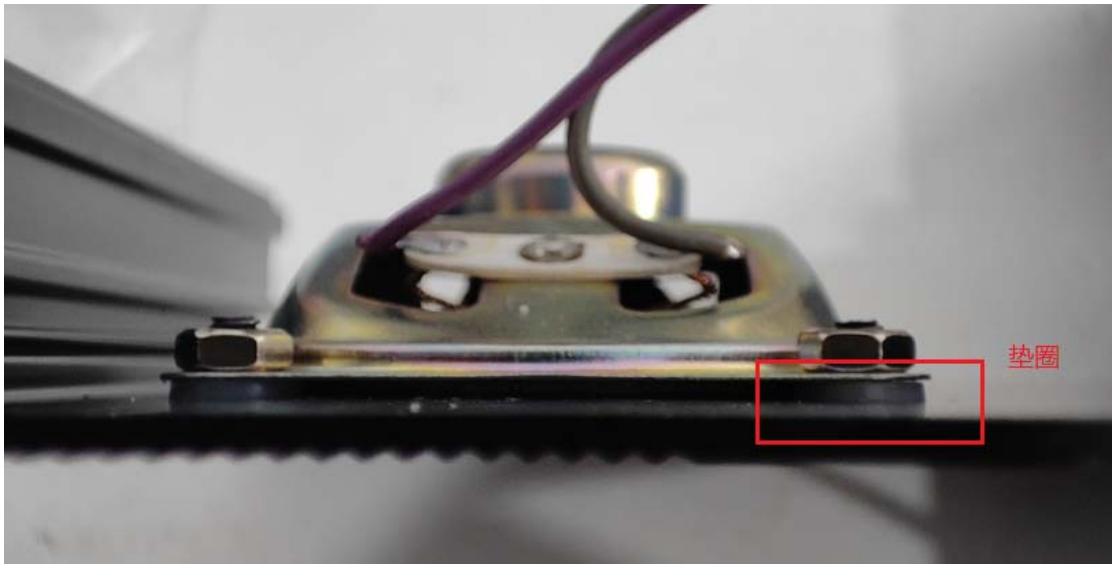

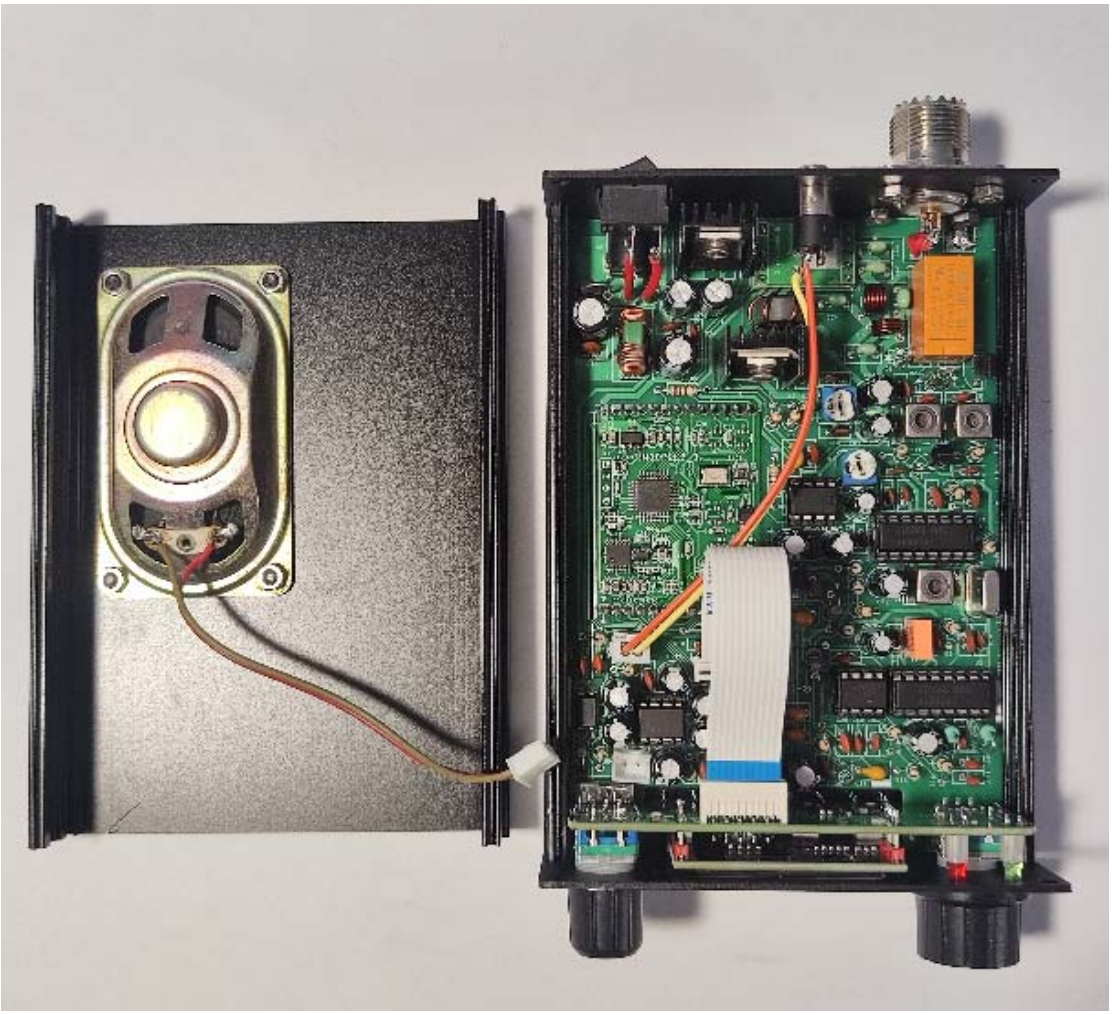

The connection between the front panel and the mother board, pay attention to the direction of the FPC connector, do not install the reverse!

Assembly and Adjustment

Test all transistors, resistors and capacitors with a multimeter before installing all components. Then install all components against the circuit diagram and the markings on the PCB board.

Generally follow the low to high order of installation. First weld the patch module, and then weld the plug-in device. After welding, check whether there is a solder short circuit.

Due to the MOS field effect tube in the kit, in order to prevent electrostatic breakdown, the soldering iron should be properly grounded or disconnected from the soldering iron power supply and used for waste heat welding.

After welding is completed, do not install devices to the integrated circuit socket, power on to check whether +5V is normal, if abnormal, it means that the MOS FET may weld breakdown, after checking +5V and then install devices to the integrated circuit socket, which can effectively avoid the core integrated circuit welding bad.

Remove the pin that not used on DRV board。

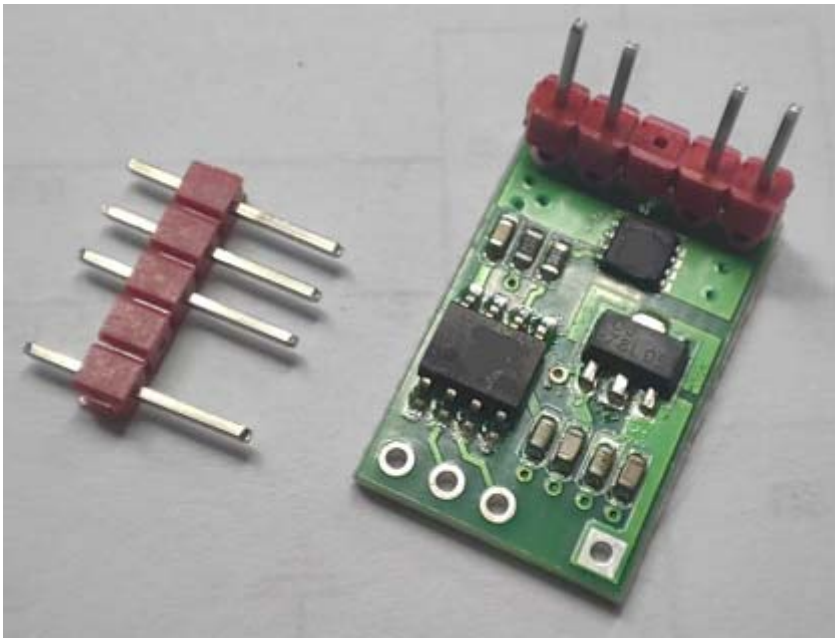

Please refer to the following figure for the installation direction of the DRV driver board.

Pay attention to the LED direction.

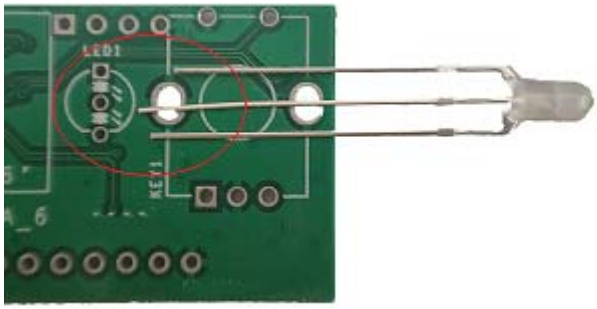

Everything is in order, check and then connect the power supply, the positive and negative polarity of the power supply must not be connected wrong. Plug your Walkman headphones into the headphone socket and you should hear white noise. Attach 51 ohm resistance to the antenna end to make a false load, access the key, and detect the whole machine emission current, which should be about 0.9A. Do not short connect the KEY launch for a long time, otherwise the pseudo

load heating is relatively large.

When receiving, select a frequency signal, carefully adjust T1 and T2, and receive the maximum sound. It is recommended to use a non-inductive driver or a plastic driver for adjustment.

The power plug(5.5/2.1) requirements of the machine are as follows:

Debugging steps without instrument:

1 Connect a 3-meter cable to the antenna socket and power it on.

2 The electric display frequency of the machine is 9.810, and the encoder can be gently adjusted to a certain AM broadcasting station.

3 At this time, the ear will appear broadcast sound, adjust T1 so that the noise is the highest and the noise is the lowest.

Instructions for use

When adjusting the frequency, if you press the encoder once, the machine will automatically change from 1KHz step to 10KHz step, which is convenient for quick adjustment, if you press the encoder again, the machine will return to 1KHz step.

There is a stereo plug in the kit. After opening the back cover, solder the microphone wire to the plug in the colors indicated in the image below.

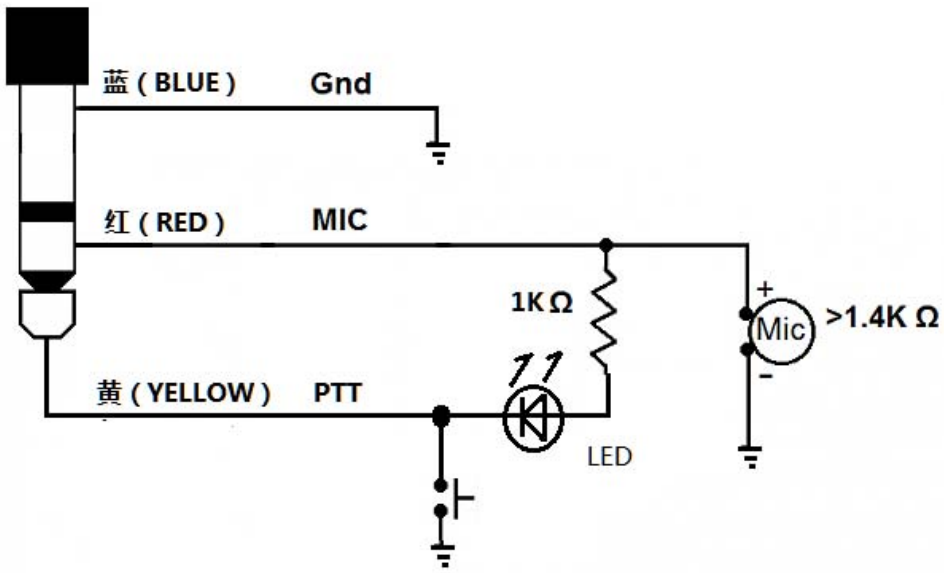

Instructions for use

The functions of the panel of this machine are as follows：

After normal power-on, the OLED screen displays normally, and the encoder is in frequency adjustment mode by default. At this time, press the STEP key, and you can see that the triangle below the number will keep moving, representing that the step is constantly changing.

By default, the volume adjustment mode is used during power-on. Press the VOL/SQL button to switch VOL setting mode or SQL setting mode. In the VOL setting, the speaker symbol is shown in the following figure. In the SQL setting, the speaker letter is shown in the following figure. Respectively represent the current encoder knob mode.

VOL setting mode

SQL setup mode

Press the MENU key and the display will switch to the CH menu, > representing the currently selected item,adjusting the encoder will change the selection.

Under the CH menu, there are two CH items by default, and the four keys are:

MENU press once to switch to the next menu

LOCK Lock key, press this key, the currently selected CH entry will be locked, will not be deleted. Pressing it again will cancel the lock.

DELT Delete key. If the selected entry is not locked, press this key to delete the current CH entry. The CH table has at least one entry and cannot be completely empty.

SAVE saves the current CH table and still exists after power failure.

Under this menu, press the encoder button, all unlocked CH entries will be deleted, and the automatic search function will be activated, and the CH table will be automatically filled after the search is completed.

Pressing the MENU key will bring you to the Configuration menu, > represents the currently selected item, selecting Encoder will change the selection. Currently there are 0-5items.

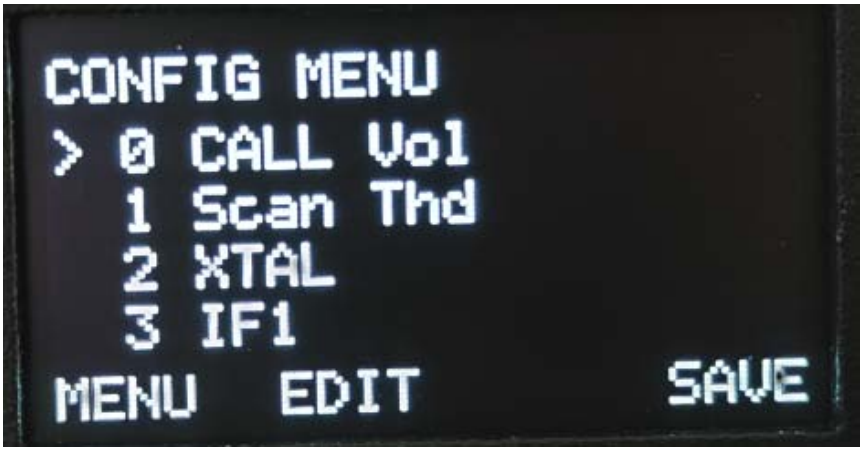

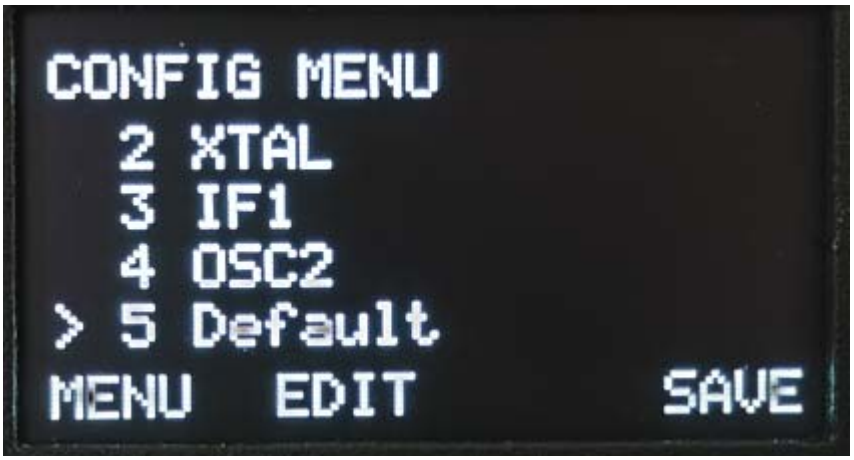

There are 3 buttons under this menu,

MENU press once to switch to the next menu

EDIT press once to edit the selected item (the encoder rotates to modify the operation), and press again to end the editing

SAVE Saves the parameter Settings

This interface is used for experienced personnel with instruments to perform operations.

0. Set CALL Vol to adjust the volume of the local receiving tone when making an automatic call.

1. CW automatic key speed. The higher the value, the faster.

2. Receiver threshold. The higher the value, the higher the threshold.

3. XTAL frequency value. Default is 250068, representing 250068 * 100Hz. It can be modified based on actual measurement.

4. Intermediate frequency frequency value. Default is 107000, representing 107000 * 100Hz.

5. Restore factory settings.

Press the MENU key to enter the information menu.

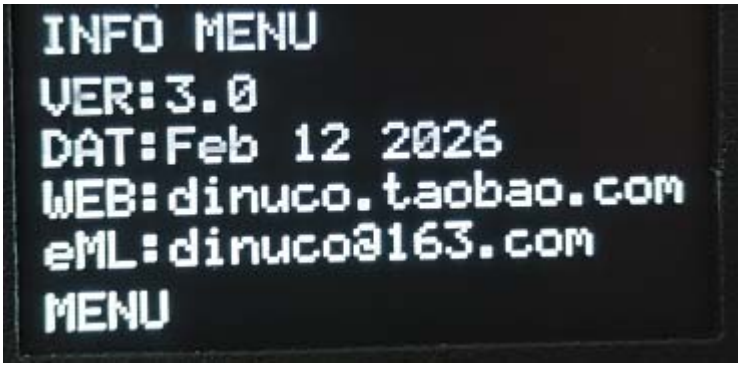

Press the SET key again to exit the initial menu.。

Attention:

Under the initial menu, long press the MENU key for more than 3 seconds to switch between VFO mode and MEM mode.

In VFO mode, if you need to save a frequency and hold down the STEP key for more than 3 seconds, the current frequency key is written into the CH table.

Under the initial menu, the machine will automatically write the current set band, mode, frequency, volume, and squelch into the internal EEPROM, which will be used directly when the next power on.

Chassis mounting

This circuit board can be conveniently placed in a standard aluminum profile case with a size of 76mm*35mm*100mm (this case is not included in this kit, please purchase it yourself if necessary).

Parts List

1/4Wresistor		
R1,R2,R21,R23	100	
R3,R5,R7,R9,R12,R30	1K	
R4,R6,R14,R15,R17,R20	10	
R8,R16,R18,R19,R22,R24, R25,R26,R27,R28,R29	10K	
R10	100K	
R11	470	
R13	4.7K	
Variable resistor		
W1	1K	
W2	10K	
Magnetic beads, inductors, transformers		
T1,T2,T3	7x7 IF transformer	
L1,L2	100uH	
L3	N1065 Magnetic ring	
L4,L5	0.75-5mm	Hollow inductor
B1	T120604 Common-mode inductance	
Quartz crystal resonator		

X1	10M08A	
Y1	455KHz Ceramic filter	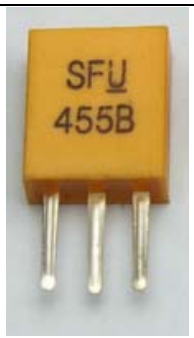
Chip capacitance		
C1,C2,C3,C4,C5,C11,C12,C13,C19,C24,C25,C26,C27,C32,C33,C34,C35,C36,C37,C42,C43	0.1uF(104)	
C6,C7	100pF(101)	
C9,C10,C14,C15,C16,C17,C18,C23,C30,C31	0.01uF(103)	
C20,C22	18p	
C21	2pF	
C40,C41	4700pF	
Monolithic capacitor		
C8,C28,C29,C38,C39	3.3uF	
CC4 capacitor		
CC1	120pF	
CC2,	680pF(681)	
CC3	240pF(241)	
CC4,CC5	330pF(331)	
Electrolytic capacitance		
CP2,CP3,CP6,CP14,CP15	100uF /25V	
CP1,CP5,CP7,CP10,CP12	10uF /25V	
CP4,CP9,CP11,CP13,CP16,CP17,CP18	220uF /25V	
CP19,CP20	470uF /25V	
CP8	47u /25V	
Transistor		
D1,D2,D3,D4	1N4148	
D5	P6KE16A	
Q1	TIP42	with heat sink

Q2	8050	
Q3	J310	
IC		
U1	LM386（DIP8）	with IC socket
U2,U3	TA2003（DIP16）	with IC socket
U4	PC817	
U5	4558（DIP8）	with IC socket
U6	FM62429（DIP8）	with IC socket
U7	TDA2822M（DIP8）	with IC socket
U8	7805（TO220）	with heat sink
U9	UM66T（TO92）	
Other device		
J2	UHF-KF	
J3	FPC socket	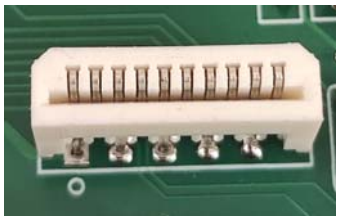
J6	SPK XH2.5 socket	
J7	PHN XH2.5 socket	

J8	Power socket	
J1	DRV driver board	
J5	3.5mm stereo socket	MIC（insert micro phone）
K1	HK19F-12V relay	
Blank PCB board×1pcs		
Heat sink ×1、M3 screw ×1		

PCB Assembly Drawing

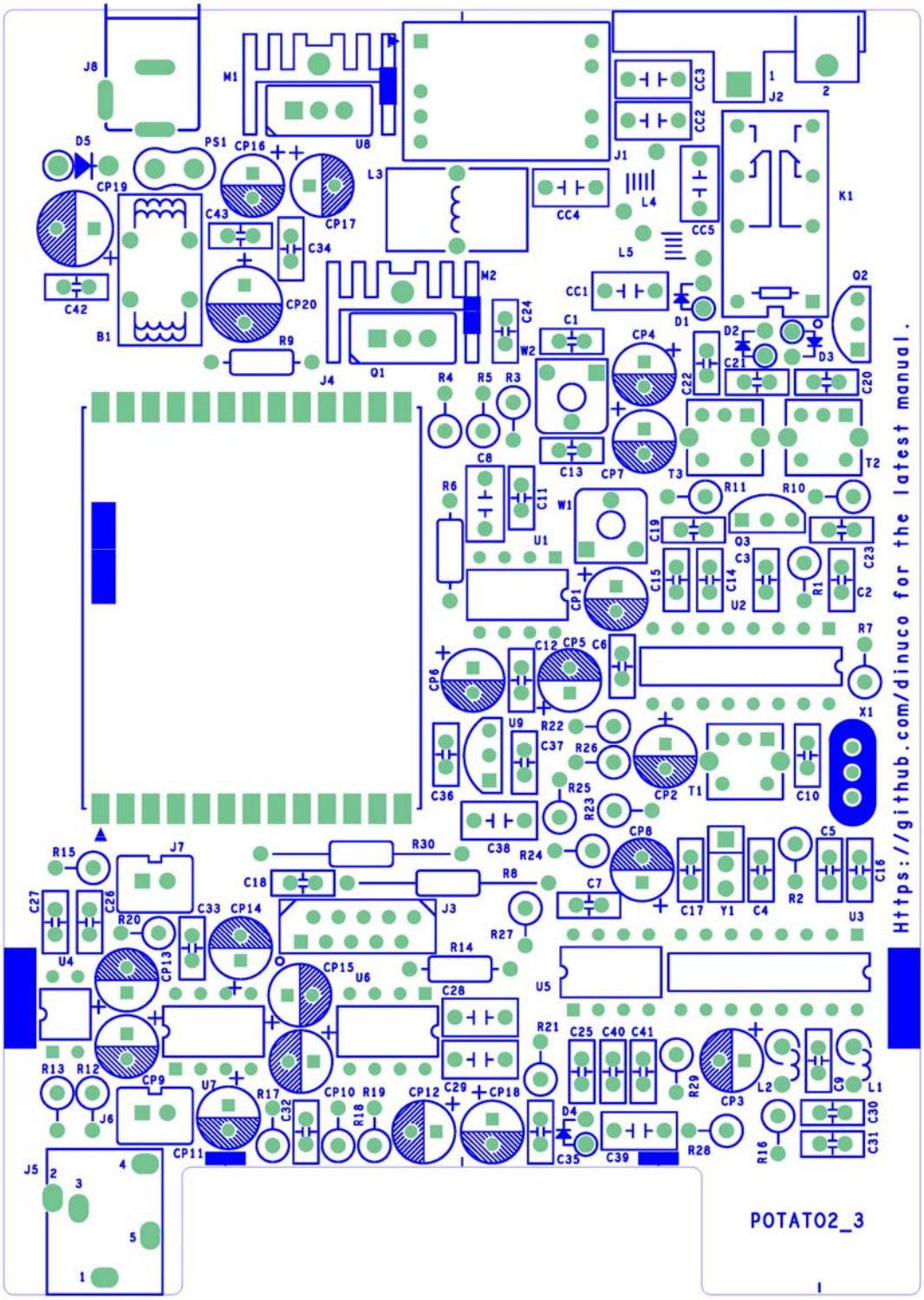

Resistor Color Codes and Ceramic Capacitor Identification

Resistors are marked using colored bands. Most resistors are 5% accuracy parts and marked with four bands. Less common 1% accuracy resistors are marked with 5 color rings. The following table can be used to read the value of these resistors:

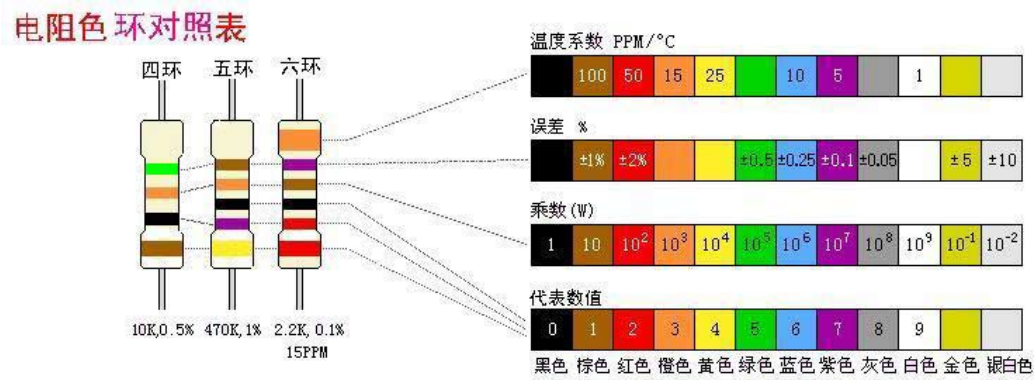

The capacitance of ceramic capacitors is generally denoted in units of pF (p meaning pico or 10^-12). However, some parts are directly labeled, such as 1000p, 220p, etc.

Most are labelled in exponential terms, such as 102,221. The first two digits are two most significant digits of the capacitor's value, the last digit being the number of zeros added after these digits. For example, "102" means that the leading digits are 10, while 2 means that 2 more zeros are added, i.e. 1000pF. Similarly, "221" means that the leading digits are 22, and 1 means that one further zero is added, i.e. 220pF.

62 here means 62pF

102 here means 1000pF

Polarity of Electrolytic Capacitors

Electrolytic capacitors are polarised. Please make sure that the positive and negative pins of these capacitors correspond correctly to the PCB markings when inserting these parts.

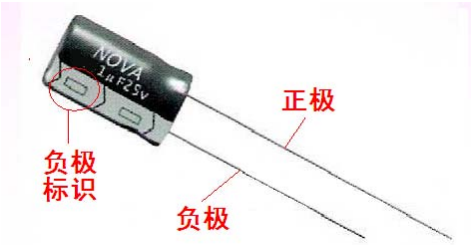

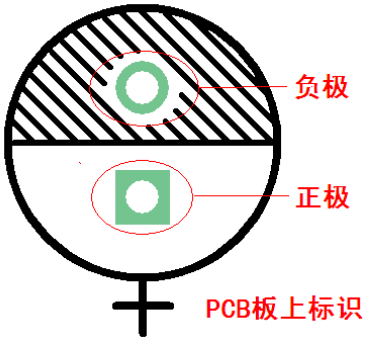

IC Identification

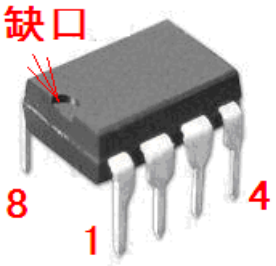

8 脚直插管脚排列

Identification of Transistors and Diodes

TO-92 package pin arrangement 1N4148 diode polarity P6KE16A diode polarity

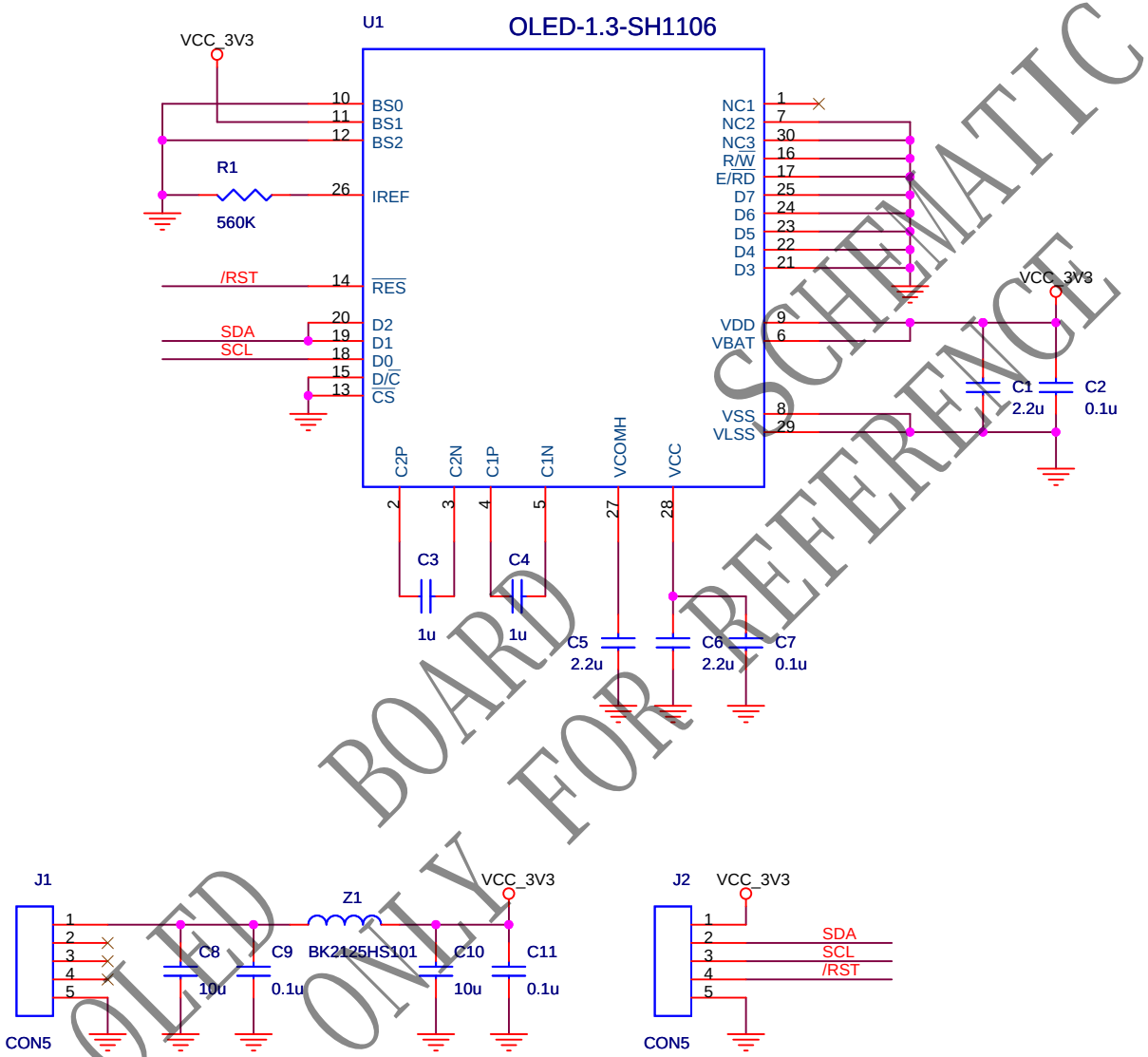

SCHEMATIC
BOARD
OLED
ONLY
FOR REFERENCE

Title	01.MAIN	
Size A4	Document Number HM00OBKA_3	Rev 3.0
Date: Saturday, January 31, 2026	Sheet 1 of 1	

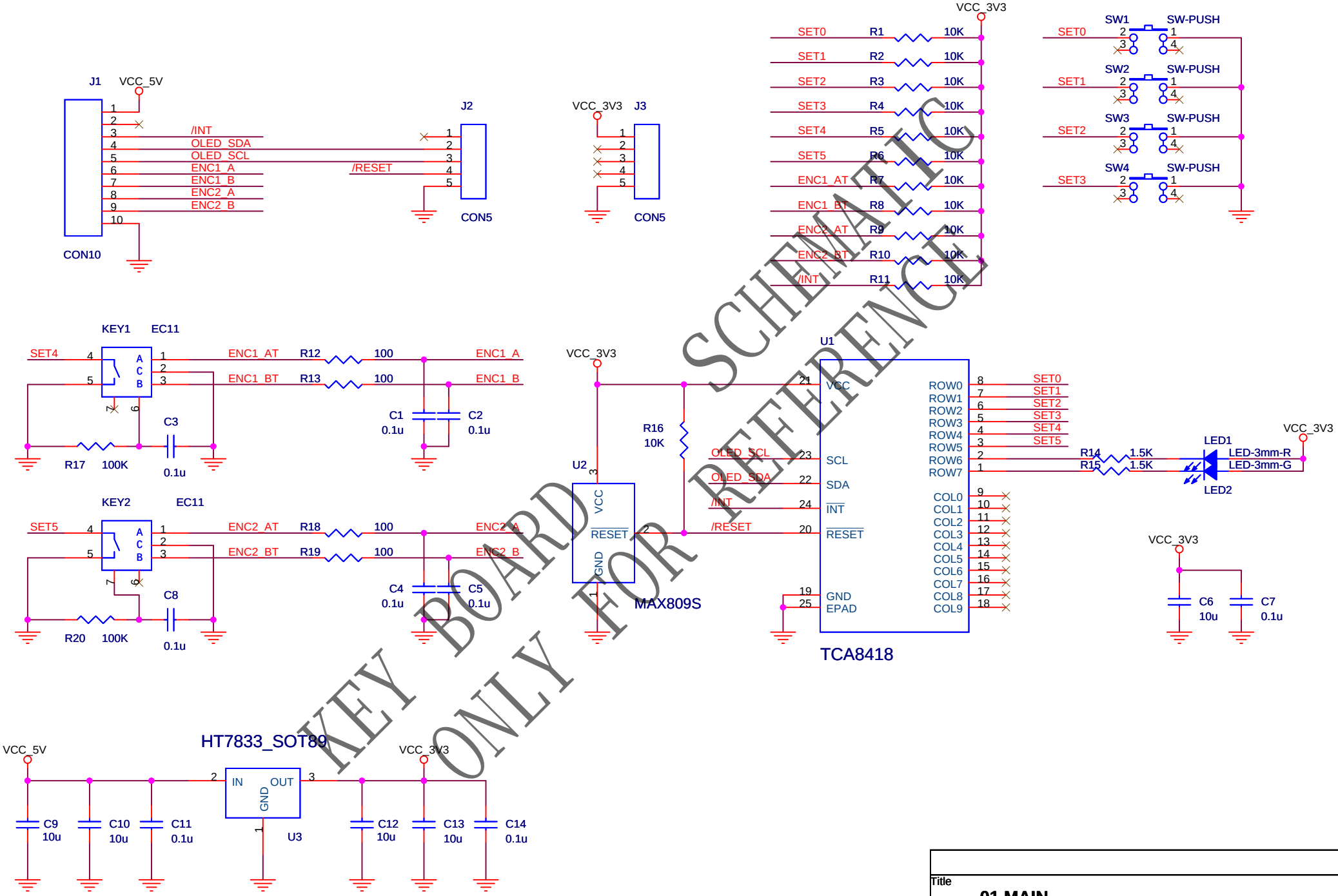

KEY BOARD SCHEMATIC
ONLY FOR REFERENCE

Title	01.MAIN	
Size A4	Document Number HM00KEYA_2	Rev 2.0
Date: Saturday, January 31, 2026	Sheet 1 of 1	

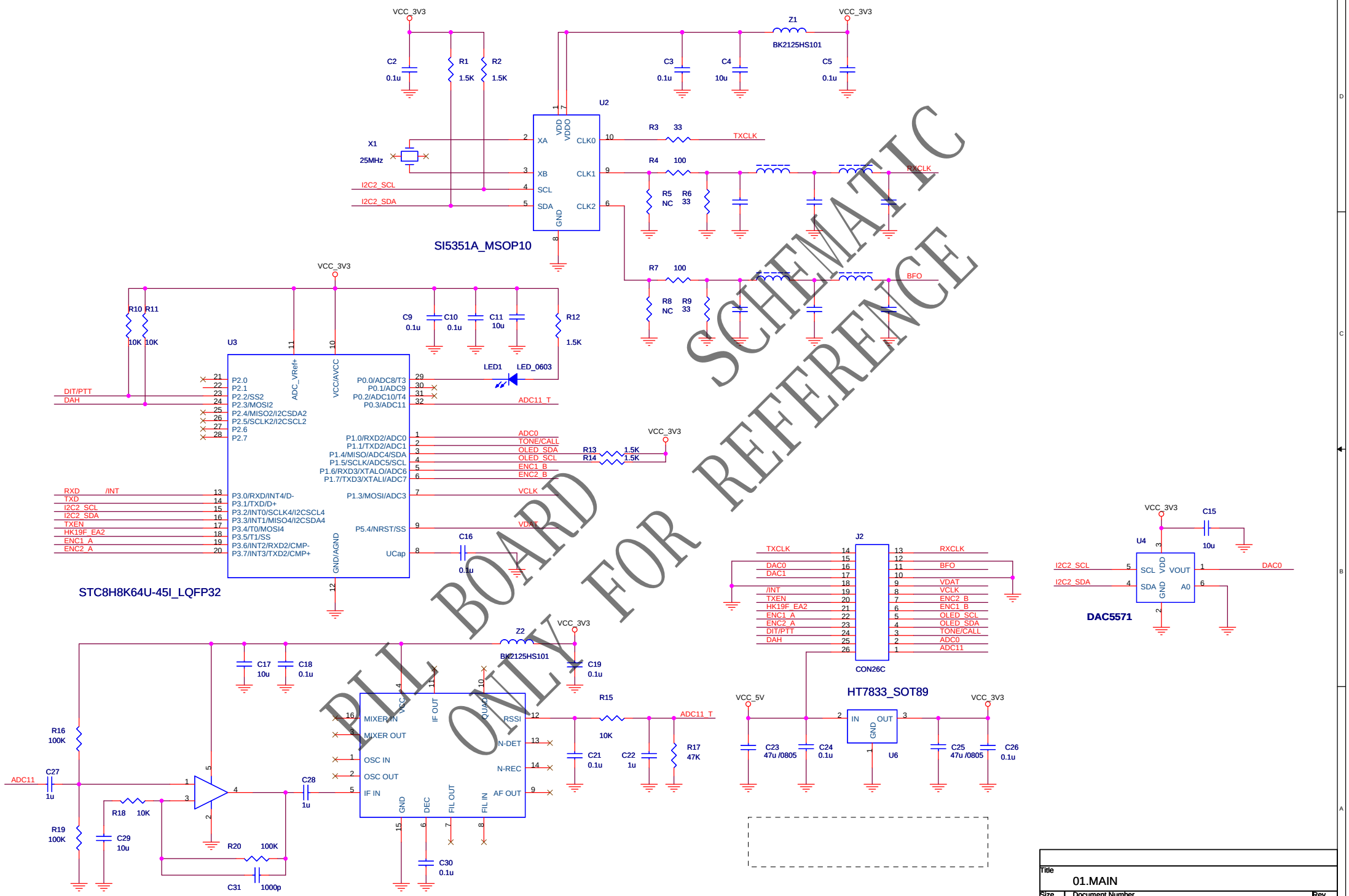

Title	01.MAIN
Size A3	Document Number HM00PLLD_3
Rev	3.0
Date:	Friday, December 05, 2025
Sheet	1 of 1

土豆2（POTATO2）27MHz AM收发机电路图（V3.0）

淘宝店：dinuco.taobao.com
邮　箱：dinuco@163.com

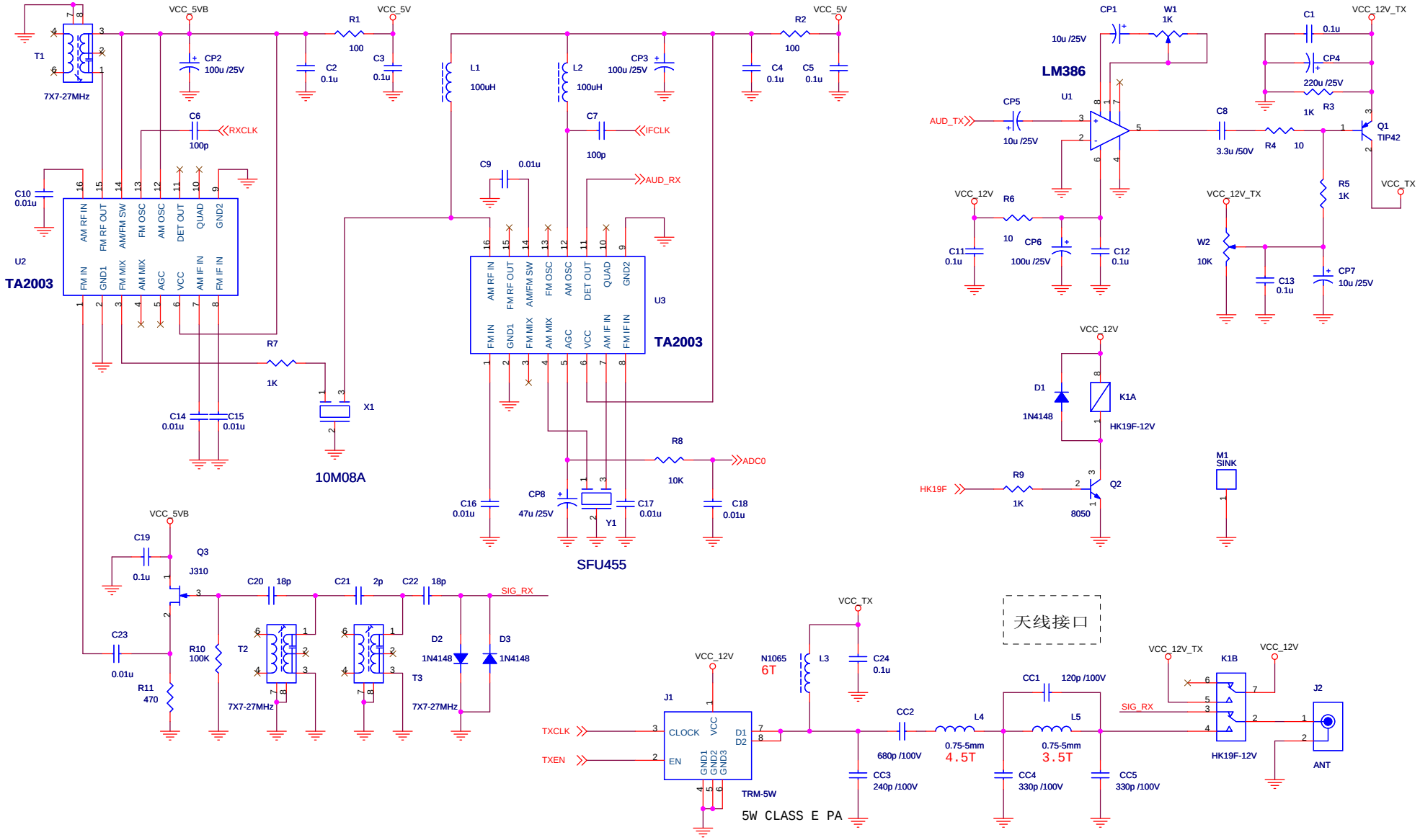

Title	01.MAIN	
Size A3	Document Number POTATO2_3	Rev 3.0
Date: Tuesday, January 13, 2026	Sheet 1 of 2	

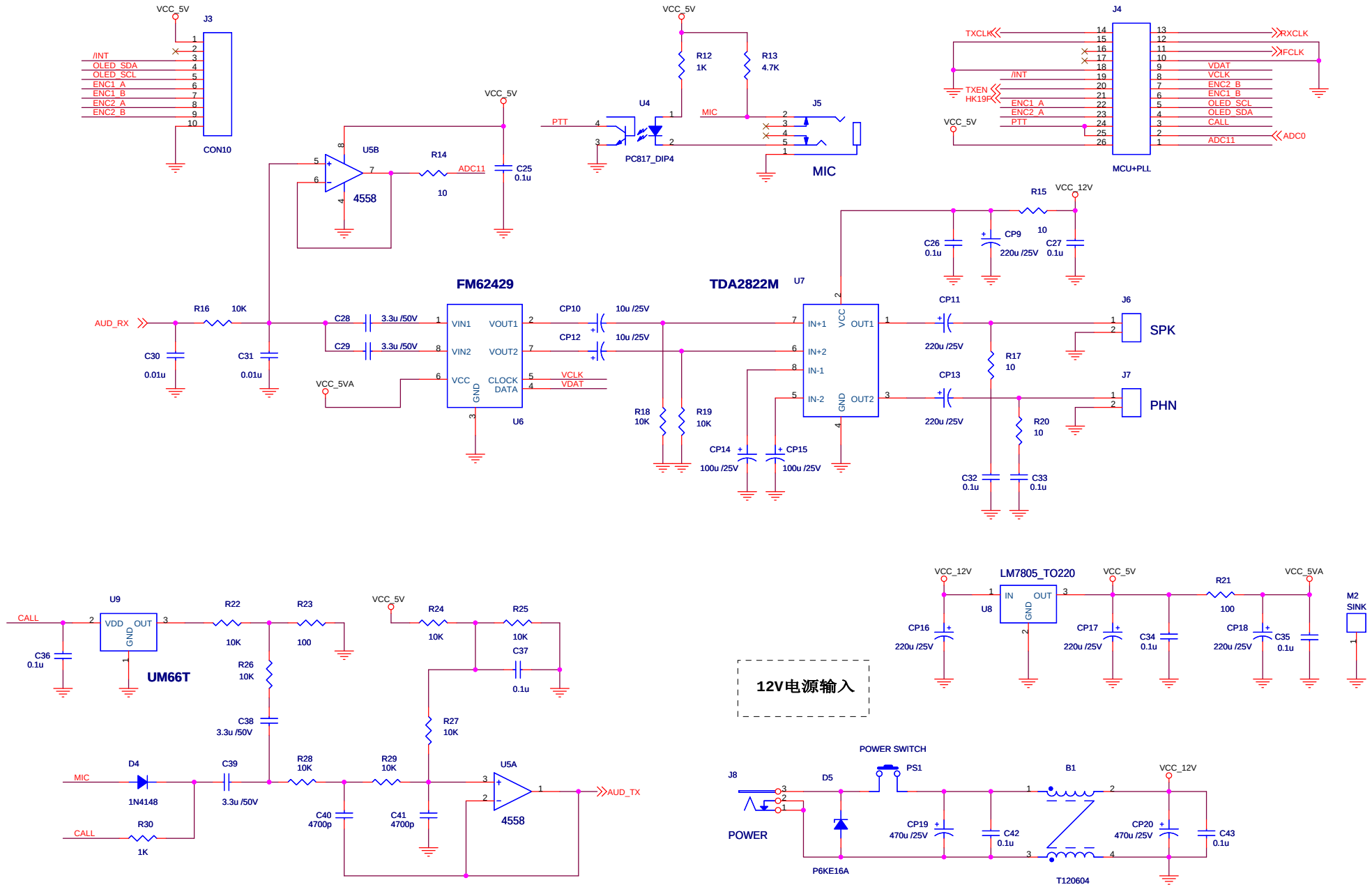

Title	02.OTHER
Size A3	Document Number POTATO2_3
Rev	3.0
Date:	Tuesday, January 13, 2026
Sheet	2 of 2